CM ET
ENTERTAINMENT TECHNOLOGY

Distributed by:

Kristian Electric Ltd.

Calgary
4215 64th Avenue SE
(403)292-9111

Edmonton
14236 121A Avenue
(780)444-6116

Saskatoon
710 46th Street E
(306)343-9111

www.kristian.ca

PROSTAR® VS

VARIABLE SPEED ELECTRIC CHAIN MOTOR

COLUMBUS McKINNON CORPORATION

PRECISION CONTROL WITH FAST LIFTING SPEEDS

Whether you need to quickly change out a set during a performance or remove heavy equipment from road cases for setup or maintenance, the CM-ET Prostar® VS is the ideal electric chain motor.

The Prostar VS provides precision control, fast lifting speeds and quiet operation – all in a compact and portable design. Variable speed capabilities let you easily configure the Prostar VS to the task at hand with an easy-to-use interface that allows operators to adjust the operating speed and motor performance right on the spot.

CM ET
ENTERTAINMENT TECHNOLOGY

PROSTAR® FAMILY AT A GLANCE

CM-ET PROSTAR VS BRINGS THE SPEED

The CM-ET Prostar family of electric chain motors is known for its compact design, quiet operation and reliable performance. The Prostar VS rounds out this offering, providing precision control with fast lifting speeds that can be easily adjusted for the application.

	PROSTAR		PROSTAR VS	
Capacities	**Speed (FPM)**	**Reeving**	**Min - Max Speeds (FPM)***	**Reeving**
250 lb.	16, 24, 40	1	3 to 63	1
300 lb.	16, 24, 40	1	3 to 63	1
500 lb.	8, 12, 16, 20, 24	1 & 2	2 to 39	1
550 lb.	—	—	1 to 26	1
600 lb.	8, 12, 20	2	2 to 31	2
1,000 lb.	6, 8, 12	2	1 to 20	2
1,100 lb.	N/A	—	1 to 13	2

Totally Enclosed Non-Vented Motor	Standard	Standard
Load Chain	Standard Unplated / Optional Plated	Standard Unplated / Optional Plated
Chain Container	Optional	Optional
Powder Coat Paint	Standard	Standard
Available Voltages	115 to 230V Single Phase. 208 to 575V 3-Phase.	100 to 240V Single Phase. 208 to 240V 3-Phase. 460V and 575V 3-Phase with Optional Transformer.
Variable Frequency Drive Versions	N/A	Standard
Two-Speed Version	N/A	Standard
Certification	CUL	CUL
Motor Brake	DC	DC
Motor Insulation	Class B	Class F
Mechanical Load Brake	N/A	N/A
Upper Suspension	Rigid Hook Standard	Rigid Hook Standard
Suspension Option	Hook and Lug	Hook and Lug
Overload Clutch	Standard	Standard
Metric Rated	Standard	Standard
Warranty	Lifetime	Lifetime
Country of Origin	USA	USA

*Configurable codes and options available in addition to standard products.

ENTERTAINMENT TECHNOLOGY

PROSTAR® VS

VARIABLE SPEED ELECTRIC CHAIN MOTOR

The CM® Prostar VS™ variable speed electric chain motor is built for entertainment applications where precision load control is critical. This durable motor features a high H4-plus duty cycle and compact design ideal for unique rigging needs encountered at small venues.

CAPACITIES: 250 TO 1,100 LB.

STANDARD LIFT: 10 FEET
SPEEDS: UP TO 63 FT./MIN.

BENEFITS & FEATURES

RUGGED & DURABLE
Thermally protected motor. Rugged, cast aluminum alloy frame and body feature durable epoxy powder-coat finish to protect against corrosion.

LOW MAINTENANCE
Gear train lifetime lubricated with non-oxidizing grease. Totally enclosed frame protects motor from environmental contamination.

COMPACT DESIGN
Small, compact design makes motor ideal for use in tight spaces and allows for easy installation and maintenance.

OVERLOAD PROTECTION
Standard overload device protects the chain motor, operator and surrounding structure from damaging overloads.

LONG CHAIN LIFE
Durable CM Hoistaloy® Load Chain. 10-pocket, oblique-lay lift wheel for longer chain life.

SINGLE- & 3-PHASE VOLTAGE OPTIONS
100 to 240 volt single phase, 50 to 60 Hz.
208 to 240 volt 3-phase.
460 volt and 575 volt 3-phase with optional transformer.
6-1/2 ft. power cord with removable molded, 3-prong, 115-volt plug.

H4 PLUS DUTY CYCLE
With 300+ motor starts per hour and Class F motor insulation, the Prostar VS outperforms the H3 rating of its major competitors.

5:1 DESIGN FACTOR

NEMA 4 INDUSTRIAL-RATED CONTROL SYSTEM

MADE IN THE USA

LIFETIME WARRANTY

UL®

OPTIONAL FEATURES

VARIABLE CONTROLS
Choose from 2-speed, 2-step infinitely variable, 3-speed and 3-step infinitely variable controls for single and 3-phase applications.

DURABLE CHAIN CONTAINERS
Impact-resistant plastic/mesh or metal chain containers.

SWIVEL-HOOK SUSPENSION

LATCHLOK® HOOK & LUG SUSPENSION
Swivel Latchlok hook suspension rotates 360° for easy installation and positioning. Lug-mount suspension is also available.

CM-ET Prostar® VS shown with optional Latchlok hooks.

ADJUST OPERATING SPEED QUICKLY AND EASILY

Easy-to-use interface allows for adjustment of chain motor operating speed, including acceleration and deceleration rates. Built-in error prevention ensures motor is programmed correctly. Performance information is provided, including start/stop cycles, motor run time, over-temp and over-current events, temperatures and fault information.

SMOOTH-SWIVELING HOOKS

While positioning a load, especially at full capacity, operators can experience rotational resistance when using swivel hooks. To address this, Columbus McKinnon has incorporated needle roller thrust bearings into our swivel hook assemblies to eliminate rotational inertia – regardless of the load capacity. This ultimately helps ensure smooth and easy hook attachment and load positioning.

CM-ET PROSTAR® VS
SPECIFICATIONS & DIMENSIONS

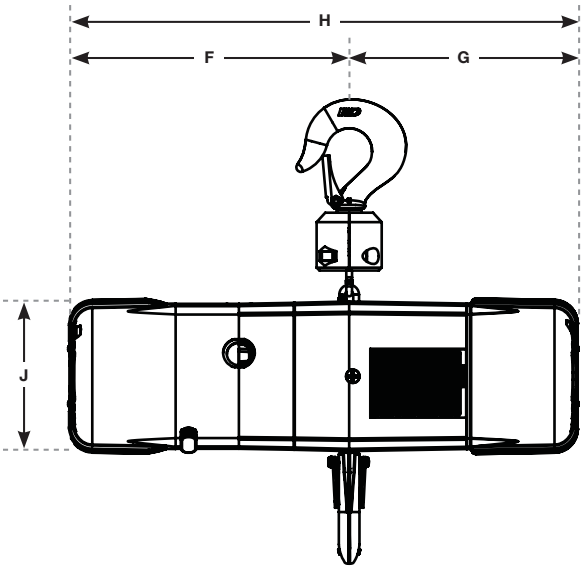

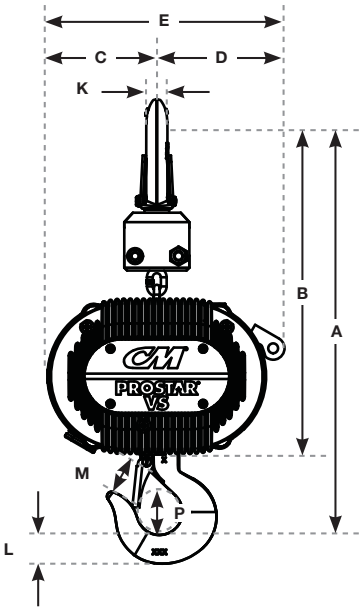

DIMENSIONS

Capacity (lbs.)	Dimensions in. (mm)												
	A	B	C	D	E	F	G	H	J	K	L	M	P
250	11.85 (301)	8.82 (224)	2.97 (75)	3.48 (88)	6.45 (164)	7.62 (194)	6.22 (158)	13.84 (352)	4.15 (105)	0.58 (15)	0.78 (20)	1.05 (27)	1.25 (32)
300	11.85 (301)	8.82 (224)	2.97 (75)	3.48 (88)	6.45 (164)	7.62 (194)	6.22 (158)	13.84 (352)	4.15 (105)	0.58 (15)	0.78 (20)	1.05 (27)	1.25 (32)
500	11.85 (301)	8.82 (224)	2.97 (75)	3.48 (88)	6.45 (164)	7.62 (194)	6.22 (158)	13.84 (352)	4.15 (105)	0.58 (15)	0.78 (20)	1.05 (27)	1.25 (32)
550	11.85 (301)	8.82 (224)	2.97 (75)	3.48 (88)	6.45 (164)	7.62 (194)	6.22 (158)	13.84 (352)	4.15 (105)	0.58 (15)	0.78 (20)	1.05 (27)	1.25 (32)
600	12.42 (315)	10.21 (259)	3.63 (92)	2.81 (71)	6.44 (164)	7.63 (194)	6.21 (158)	13.84 (352)	4.16 (106)	0.58 (15)	0.79 (20)	1.00 (25)	1.25 (32)
1,000	12.42 (315)	10.21 (259)	3.63 (92)	2.81 (71)	6.44 (164)	7.63 (194)	6.21 (158)	13.84 (352)	4.16 (106)	0.58 (15)	0.79 (20)	1.00 (25)	1.25 (32)
1,100	12.42 (315)	10.21 (259)	3.63 (92)	2.81 (71)	6.44 (164)	7.63 (194)	6.21 (158)	13.84 (352)	4.16 (106)	0.58 (15)	0.79 (20)	1.00 (25)	1.25 (32)

SPECIFICATIONS

Capacity (lbs.)	Product Code: 2-Speed 2-Step Infinity Variable Speed 3-Speed	Product Code: 3-Step Infinity Variable Speed	Maximum LIft Speed (ft./min.)	Standard Lift (ft.)	Reeving	Motor HP	Voltage	Weight (lb.)
250	2-Speed, 2-Step Infinity Variable Speed and 3-Speed configured units available upon request.	PVS0250	63	10	1	.56	100 to 240V Single Phase. 208 to 240V 3-Phase. 460V and 575V 3-Phase with Optional Transformer.	26
300		PVS0300	63	10	1	.56		26
500		PVS0500	39	10	1	.56		26
550		PVS0550	26	10	1	.56		26
600		PVS0600	31	10	2	.56		28
1,000		PVS1000	19	10	2	.56		28
1,100		PVS1100	13	10	2	.56		28

NOTE: Configurable codes and options available in addition to standard products shown above.

LOCATED AT ROCK LITITZ

A COMMITMENT TO LIVE EVENT PROFESSIONALS.

ROCK LITITZ ENTERTAINMENT TRAINING CENTER OF EXCELLENCE

Columbus McKinnon is a proud member of Rock Lititz – a one-of-a-kind community that supports innovative creativity within the live event industry. With resources ranging from design, engineering and manufacturing through rehearsals, and beyond, Rock Lititz is a one-stop-shop for any production.

Located in Rock Lititz's POD 2, Columbus McKinnon's facility is designed to provide hands-on training to entertainment riggers in an environment custom designed for production professionals.

CM-ET classes at Rock Lititz include:

- Basic Introduction & Maintenance School
- RTC Motor Certification School
- Mega School
- Fiber Rope Fundamentals & Use
- Fall Protection Authorized User
- Wire Rope Fundamentals & Use
- Safe Rigging Techniques: Level 1

For more information on our Rock Lititz training center of excellence, visit the Columbus McKinnon training website at training.cmworks.com.

USA 800.888.0985 • 716.689.5400 • fax: 716.689.5644
www.cmworks.com

© 2017 Columbus McKinnon Corporation. All Rights Reserved.

Stock # B-CMET-PSVS
160 EP 1117